REF: A276092000



IN-DRAIN

In-Drain Shower SQ - Drainage kit with pre-mounted geotextile fabric and trim plate

TECHNICAL DRAWINGS

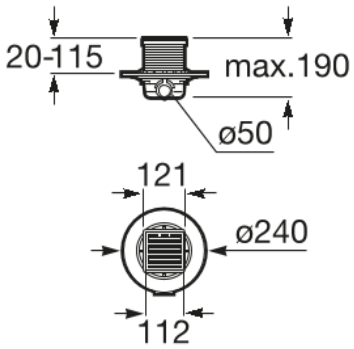

FEATURES

Drainage kit with pre-mounted geotextile fabric and trim plate for installation in built-in showers.

Geotextile fabric included

Recommended for public spaces

Waste plate included

Accessible product

© Copyright 2026, Roca Sanitario, S.A. - All rights reserved | 25-11-2026 | https://www.eg.roca.com/products/drain-shower-sq-drainage-kit-pre-mounted-geotextile-fabric-trim-plate-276092000?sku=A276092000

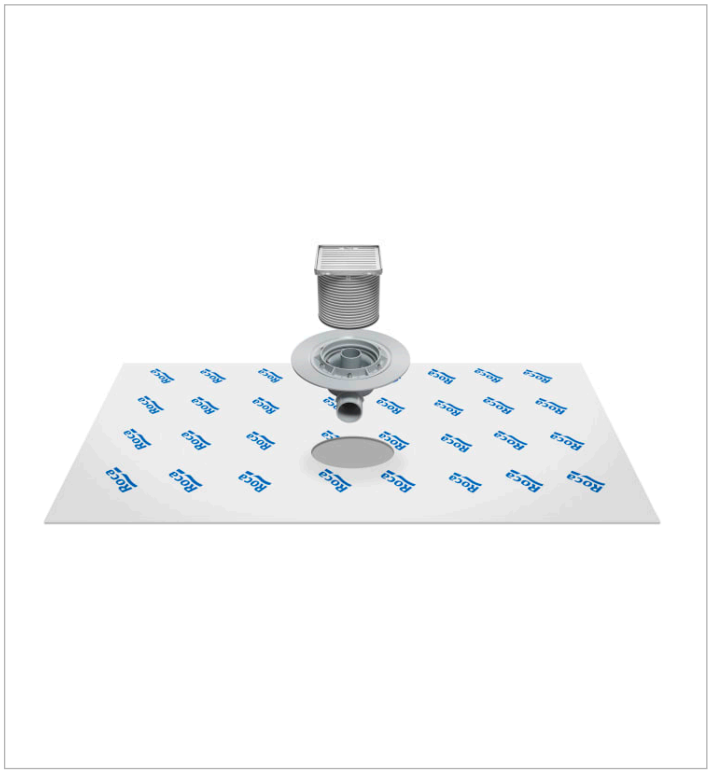

In-Drain



An innovative solution for integrated showers. A new concept that empowers accessibility and functionality. In-Drain adapts to any style, preserving the elegant essence of its shapes and ofering versatile proposals.

INSTALLATION AND USER MANUALS

User handbook

Installation Handbook

© Copyright 2026, Roca Sanitario, S.A. - All rights reserved | 25-11-2026 | https://www.eg.roca.com/products/drain-shower-sq-drainage-kit-pre-mounted-geotextile-fabric-trim-plate-276092000?sku=A276092000