

LOFT

Twin-lever basin mixer with pop-up waste. L-Size

TECHNICAL DRAWINGS

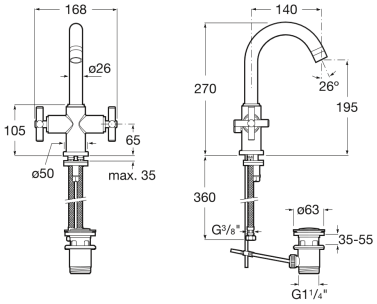

FEATURES

Twin-lever basin mixer with pop-up waste and flexible supply hoses. L-Size.

Aerator type: Integrated aerator

Application place: Basin

Faucet type: Twin-lever

Flexible supply hoses included

Installation type: Deck-mounted

Pop-up waste

Twin lever control: 1/2 Turn

© Copyright 2026, Roca Sanitario, S.A. - All rights reserved | 24-11-2026 | https://www.eg.roca.com/products/twin-lever-basin-mixer-pop-waste-l-size-5A3043C00?sku=A5A3043C00



Loft



The avant-garde design and the technology blend together to create strong and high-quality elements. This design is a timeless, singular and unalterable style proposal with a refined finish and the originality of its contours fill every space with elegance, precision and distinction.

INSTALLATION AND USER MANUALS

Installation Handbook

© Copyright 2026, Roca Sanitario, S.A. - All rights reserved | 24-11-2026 | https://www.eg.roca.com/products/twin-lever-basin-mixer-pop-waste-l-size-5A3043C00?sku=A5A3043C00